General Layout for SmartRooms Control System Using 20Relay Panel

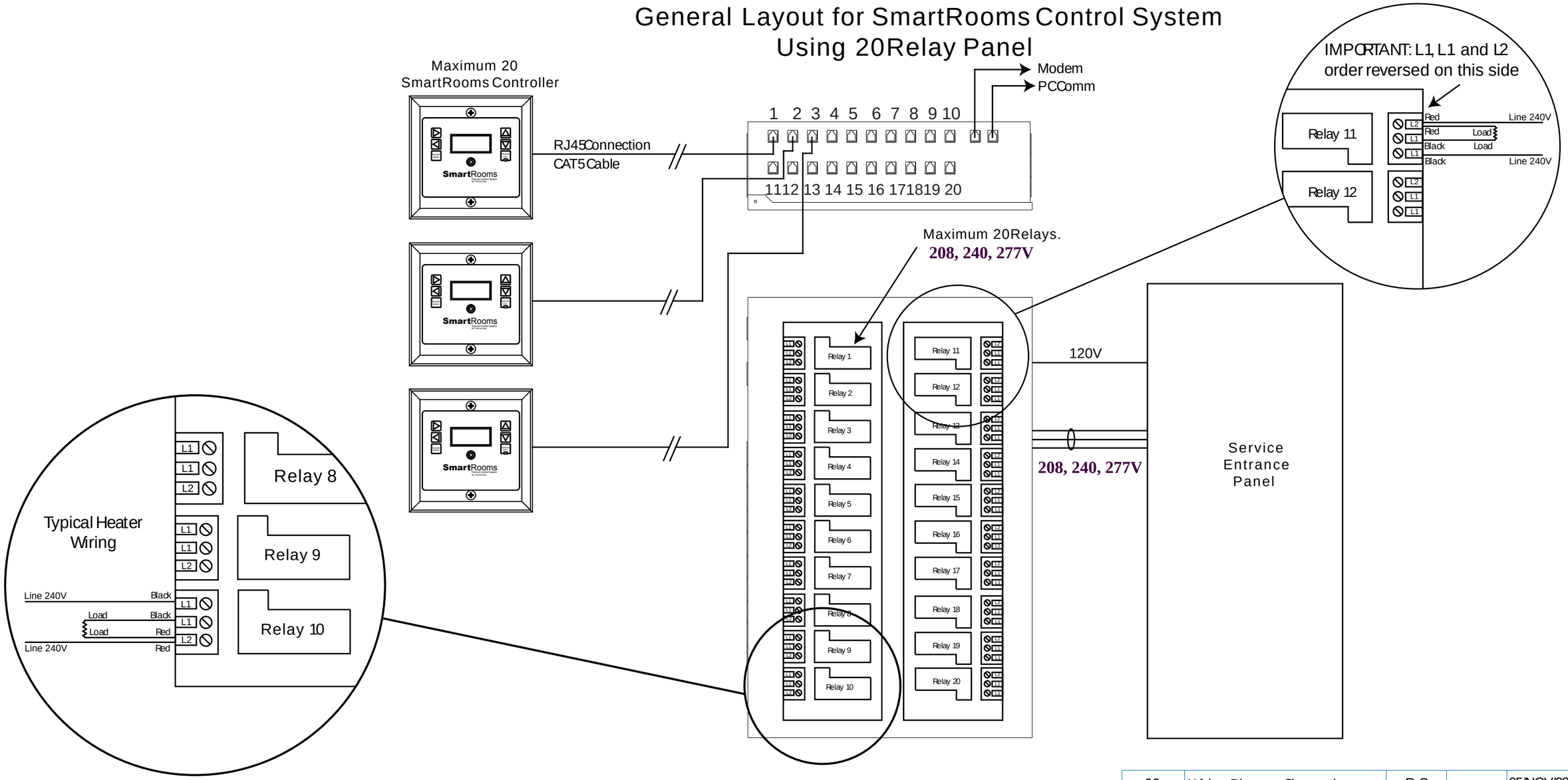

REV	ECR/DRN NO.	IMPL BY	APVD BY	DATE
03	Wiring Diagram Changed	R.S.	-----	05/NOV/03

REVISIONS

CUSTOMER NAME:	
JOB NAME:	
VOLTAGE:	
# OF CIRCUITS:	

UNLESS OTHERWISE SPECIFIED, ALL DIMENSIONS ARE IN INCHES, MILLIMETERS ARE IN SQUARE BRACKETS.

THE INFORMATION CONTAINED HEREIN IS PROPRIETARY TO THERMARAY INC. AND IS TO BE USED BY THE RECIPENT SOLELY FOR THE PURPOSE FOR WHICH IT IS SUPPLIED. IT SHALL NOT BE DISCLOSED, IN WHOLE OR IN PART, TO ANY OTHER PARTY WITHOUT THERMARAY'S PRIOR PERMISSION.

PRELIMINARY	☐
RELEASED	X
DRAWN BY	DATE
CHECKED BY	DATE
APPROVED BY	DATE

INCHES

DIMENSION	DECIMAL PLACES .XX	.XXX
BELOW 6	±.125	±.063
6 TO 24	±.20	±.10
OVER 24	±.25	±.125

THERMA-RAY INC.
670 WILSEY ROAD, UNIT 6
FREDERICTON, NB, CANADA, EIC 5J8
TEL:506.457.4600 FAX:506.457.4699

TITLE: General Layout for SmartRooms Control System Using 20Relay Panel

SIZE: B | DRAWING NO.: SM1035 | REVISION: 03

SCALE: 19/210 | SHEET 1 OF 1